Walker, Michigan, U.S.A. 49534-7564

USER'S OPERATING AND INSTRUCTION MANUAL

MODEL 777-N

VARIETY SLICER

0777S20000-CV5

OLIVER®
Helping People Feed People

3236 Wilson Drive NW, Walker, MI 49534
800-253-3893 | www.oliverquality.com

777-N Variety Slicer

INDEX

Section Description — **Document No.** — **Page No.**

SAFETY INSTRUCTIONS ---------- 0777S20034 ---------- 1-1

DESCRIPTION/SPECIFICATIONS ---------- -- 0777S20035 ----------2-1
Description ---------- 2-1
Specifications---------- 2-1

INSTALLATION INSTRUCTIONS ---------- 0777S20036 ----------3-1
Removing the Slicer from the Shipping Platform ---------- 3-1
Installing the Rubber Feet ---------- 3-2
Installing Optional Casters ---------- 3-2
Installing Bagging Scoops ---------- 3-3

OPERATING INSTRUCTIONS ---------- 0777S20037 ---------- 4-1

TROUBLESHOOTING ---------- 0777S20038 ----------5-1
The Slicer Will Not Start (Motor is Not Humming) ---------- 5-1
The Slicer Will Not Start (Motor is Humming) ---------- 5-2
The Slicer Starts Without Pulling the Knob ---------- 5-2
The Slicer Does Not Stop When Slicing is Complete ---------- 5-2
The Slicer Stops Before Slicing Starts or is Complete ---------- 5-2
Bread Slices Vary in Thickness ---------- 5-2
The Blade Frames are Knocking ---------- 5-3

MAINTENANCE ---------- 0777S20039 ----------6-1
Cleaning ---------- 6-1
Lubrication ---------- 6-1
Removing the Blade Frames ---------- 6-1
Replacing the Blade Frames ---------- 6-4
Changing the Blades ---------- 6-5
Tightening the Belt ---------- 6-7
Replacing the Belt ---------- 6-8
Adjusting the Blade Frames When Slices Vary in Thickness ---------- 6-9
Adjusting the Clearance Between the Blade Frames ---------- 6-9

RECOMMENDED SPARE PARTS ---------- 0777S20040 ---------- 7-1

REPLACEMENT PARTS SECTION

ASSEMBLY DRAWING (FRAME & BASE) --------- 0777S20041 ---------- 8-1

REPLACEMENT PARTS (FRAME AND BASE) ----- 0777S20041 ---------- 8-2

OLIVER
Helping People Feed People

3236 Wilson Drive NW, Walker, MI 49534
800-253-3893 | www.oliverquality.com

777-N Variety Slicer

INDEX
(Continued)

Section Description		Document No.	Page No.
REPLACEMENT PARTS SECTION (CONTINUED			
ASSEMBLY DRAWING	(HOLDDOWN & PUSHER) --	0777S20042 -----	9-1
REPLACEMENT PARTS	(HOLDDOWN & PUSHER) --	0777S20042 -----	9-2
ASSEMBLY DRAWING	(ROCKER & PULLEY) ---------	0777S20043 ----	10-1
REPLACEMENT PARTS	(ROCKER & PULLEY) ----------	0777S20043 ------	10-2
ASSEMBLY DRAWING	(BLADE FRAME) ----------	0777S20044 -----	11-1
REPLACEMENT PARTS	(BLADE FRAME) ----------	0777S20044 ----	11-2

ELECTRICAL SINGLE PHASE ----------0777S20047-------- 12
Wiring Diagram (Single Phase) ---------- 12
Assembly Drawing (Single Phase) ---------- 12
Parts List 1/2 HP, 115 VAC, 60 Hertz, 1 Phase ---------- 12
Parts List 1/2 HP, 230 VAC, 60 Hertz, 1 Phase ---------- 12
Parts List 1/2 HP, 220 VAC, 50 Hertz, 1 Phase ---------- 12

ELECTRICAL THREE PHASE ---------- 0777S20046 -------- 13-1
Wiring Diagram (Single Phase) ---------- 13-1
Assembly Drawing (Single Phase) ---------- 13-1

WARRANTY ----------GEN 040228

WARRANTY PROCEDURE ----------GEN 040226

RETURNED PARTS POLICY ----------GEN 040227

3236 Wilson Drive NW, Walker, MI 49534
800-253-3893 | www.oliverquality.com

777-N Variety Slicer

SAFETY INSTRUCTIONS

WARNING

VARIOUS SAFETY DEVICES AND METHODS OF GUARDING HAVE BEEN PROVIDED ON THIS MACHINE. IT IS ESSENTIAL HOWEVER THAT THE MACHINE OPERATORS AND MAINTENANCE PERSONNEL OBSERVE THE FOLLOWING SAFETY PRECAUTIONS. IMPROPER INSTALLATION, MAINTENANCE, OR OPERATION OF THIS EQUIPMENT COULD CAUSE SERIOUS INJURY OR DEATH.

1. Read this manual before attempting to operate your machine. Never allow an untrained person to operate or service this machine.

2. Connect the machine to a properly grounded electrical supply that matches the requirements shown on the electrical specification plate and follow all specifications of local electrical codes.

3. Disconnect and lock-out the machine from the power supply before cleaning or servicing.

4. Check and secure all guards before starting the machine.

5. Observe all caution and warning labels affixed to the machine.

6. Use only proper replacement parts.

7. Do not wear loose fitting clothing or loose hair when working near this machine. Shirt tails should be tucked in.

8. Wear proper, personal, protective, safety equipment.

9. Keep Hands away form the moving parts of this machine while it is in operation.

10. In addition to these general safety instructions, also follow the more specific safety instructions given for the different areas of the machine operating instruction manual.

WARNING

DO NOT USE FOR OTHER THAN ORIGINALLY INTENDED PURPOSE.

3236 Wilson Drive NW, Walker, MI 49534
800-253-3893 | www.oliverquality.com

777-N Variety Slicer

DESCRIPTION/SPECIFICATIONS

Description

The Oliver Variety Slicer is a compact, sturdy, time tested design, which has been used in bakeries world wide for many years. It is easy to operate and allows the slicing of virtually all varieties of bread, quickly and cleanly, with a spring fed pusher that gently moves the product through the knives followed by a automatic shut off. Its design will provide years of efficient, trouble-free operation requiring a minimum of maintenance.

The Variety Slicer is of stainless steel, plated, and painted construction for easy cleaning and maintenance. The knives can be replaced, by most operators, without the need of a service call.

The Variety Slicer is backed by Oliver Products Company, who has a reputation of serving the Baking Industry for well over 60 years.

Specifications

Space Requirements: (All Dimensions are Approximate)

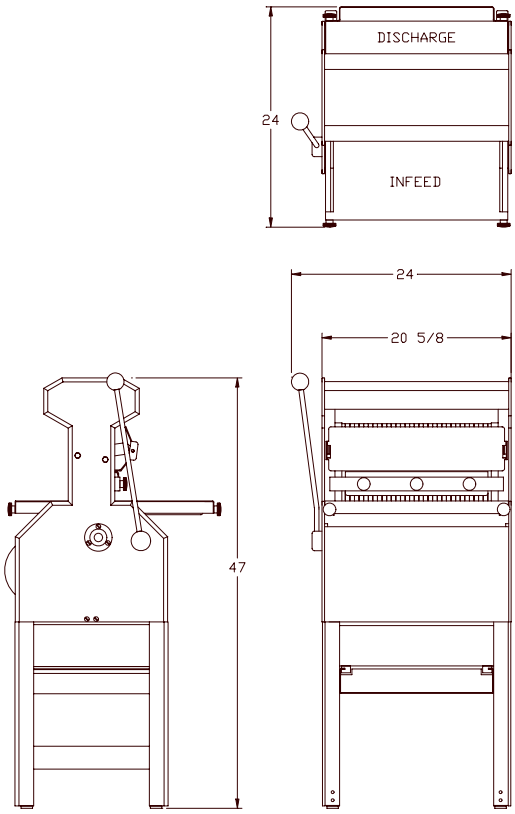

3236 Wilson Drive NW, Walker, MI 49534
800-253-3893 | www.oliverquality.com

777-N Variety Slicer

Product Capacities:

16” long, 10-1/2” wide and from 3-1/2 to 6” high.

Electrical Options Available:

1 phase, 60 hz, 115VAC, 6 Amps.
1 phase, 60 hz, 230VAC, 3.5 Amps.

Others Available consult factory.

Standard Slice Spacings

3/8, 7/16, 1/2 and 5/8 (inches)

Shipping Weight: 250 lbs.

Bagging Scoop Options:

Side, Top, or Front Versions (select one).

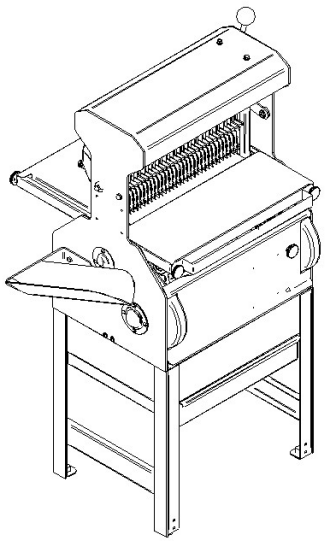

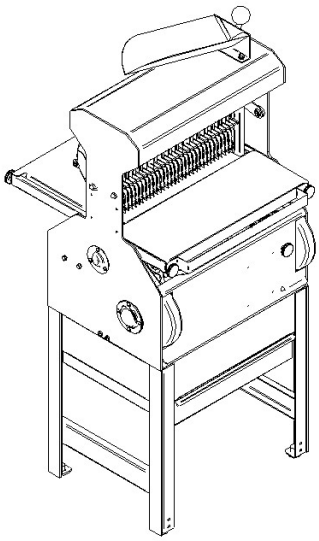

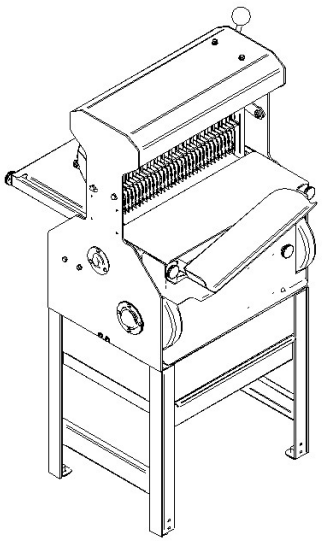

3236 Wilson Drive NW, Walker, MI 49534
800-253-3893 | www.oliverquality.com

777-N Variety Slicer Installation

CAUTION

THE SLICER IS HEAVY, USE PROPER TECHNIQUE WHEN LIFTING.
KEEP BACK STRAIGHT, KNEES BENT, AND LIFT WITH LEGS.
USE GLOVES TO PROTECT HANDS.

Removing the Slicer from the Shipping Platform

Lift the slicer off the shipping platform with one person on each side of the slicer. Set the slicer down on a level floor.

If installing rubber feet or casters, Using the shipping platform or other blocks, carefully lower the slicer to its side as shown below.

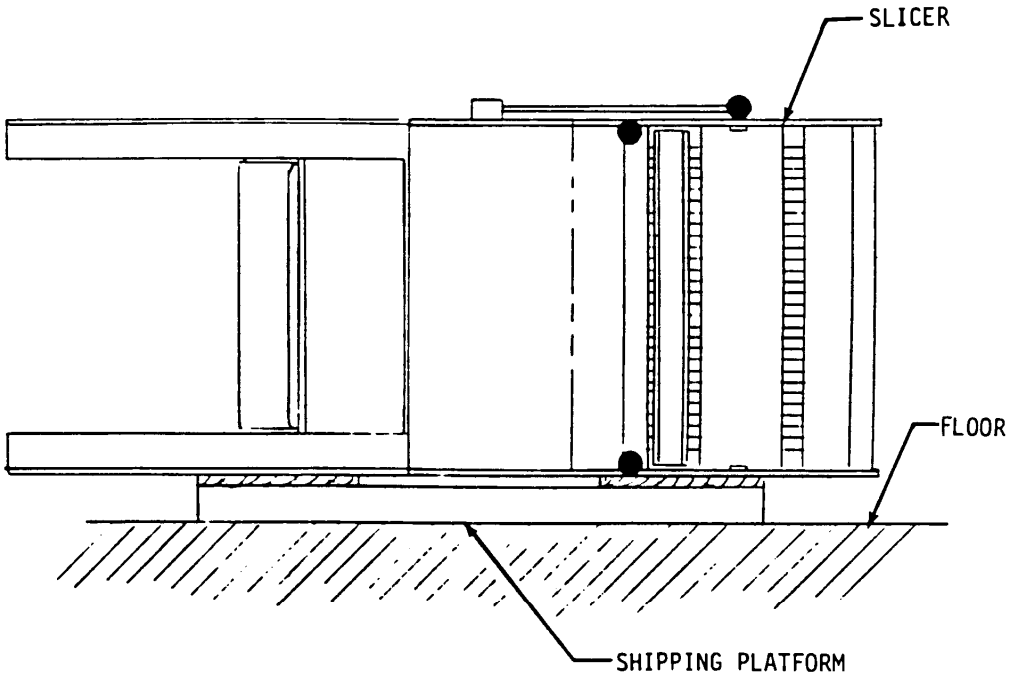

NOTE

PERFORM THE FOLLOWING DEPENDING ON WHICH OPTIONS

HAVE BEEN ORDERED WITH THE MACHINE.

777-N Variety Slicer (Installation continued)

Installing the Rubber Feet

Remove the rubber feet from the accessory package and insert the plugs into the holes in the leg bottoms, see below. Carefully restore the machine to the upright position.

Installing Optional Casters

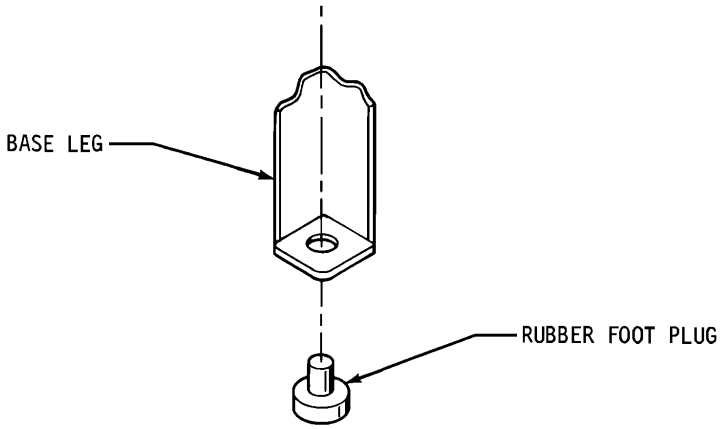

Remove the casters, caster brackets and hardware from the accessory package. Insert the studs of the brackets, see figure below, through the holes provided on the base of the slicer. Secure the brackets with the lock washers and hex acorn nuts. Press fit the casters into the brackets as shown below. Carefully restore the machine to the upright position.

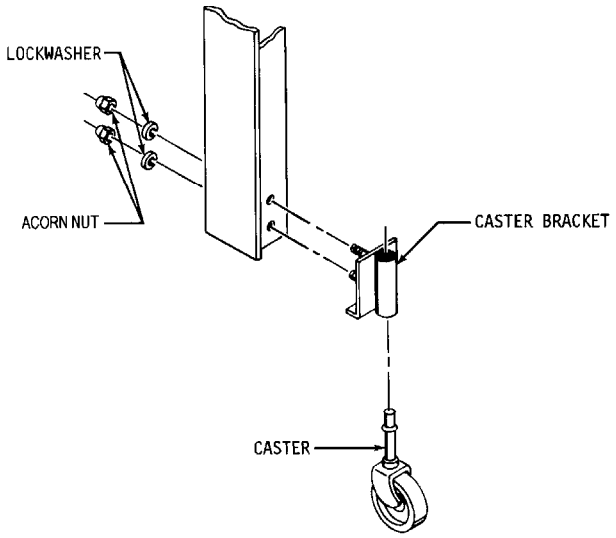

777-N Variety Slicer (Installation continued)

Installing the Top or Side Bagging Scoop (as applicable)

Disconnect the machine from power. Locate the 2 threaded mounting holes (they may be covered with plastic plugs-- push plugs out from the back to remove). Install the bagging scoop using the bolts and washers provided (requires a 7/16 inch hex wrench).

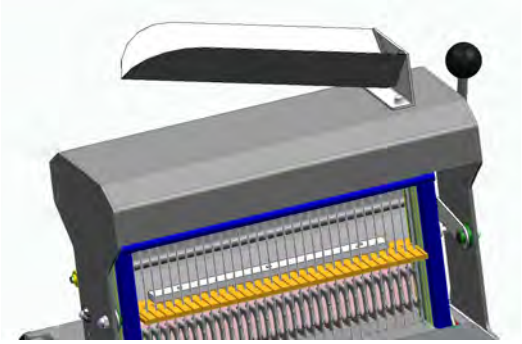
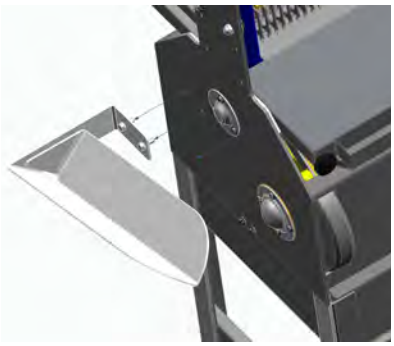
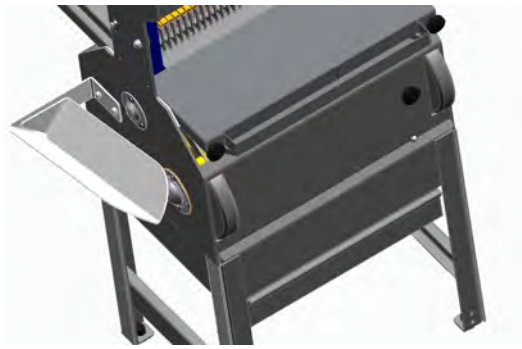

Installing the Front Bagging Scoop (as applicable)

Disconnect the machine from power. Locate the left out-feed table black plastic knob, loosen and remove. Position the bagging scoop mounting bracket at the left side under the table with the lower tab of mounting plate located inside the left wall of the slicer. The bottom of the mounting plate should be resting on angled surface beneath the table, and the top of the mounting plate resting against the side of the table, and the theaded stud projecting through the hole in the bracket. Replace and tighten the plastic knob to clamp the scoop in place.

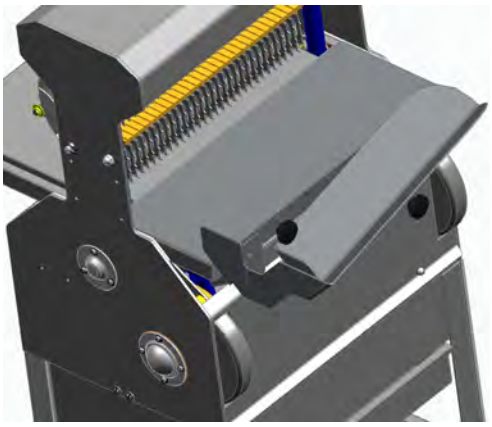
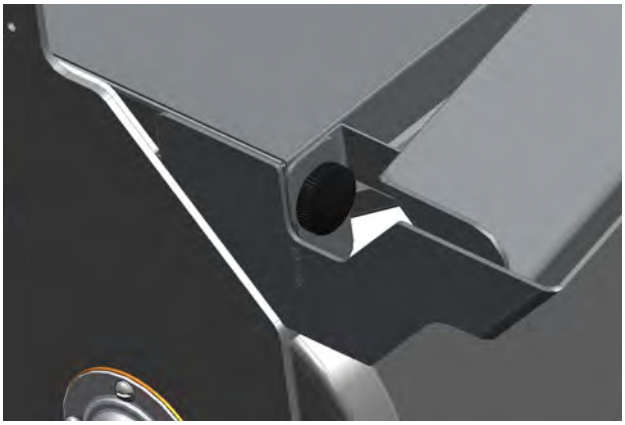

3236 Wilson Drive NW, Walker, MI 49534
800-253-3893 | www.oliverquality.com

777-N Variety Slicer

OPERATING INSTRUCTIONS

CAUTION

ALWAYS USE CARE WHENEVER WORKING NEAR THE CUTTING KNIVES.

To operate the slicer, stand on the discharge side, grasp the lever with the right hand, see below, pull it down as far as it will go and hold it there. With the left hand place the loaf of bread in front of the pusher.

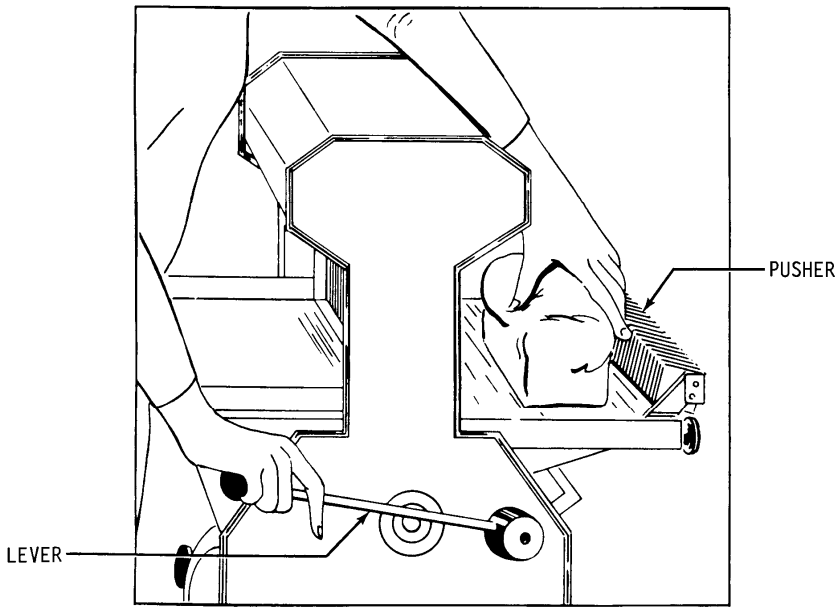

While continuing to hold the lever down with the right hand move the left hand to the discharge side of the machine and pull the motor starting knob, see next illustration. Allow the right hand to raise slowly with the lever until the loaf contacts the slicer blades. After the knives have pierced the crust remove your right hand from the lever allowing the pusher to move the loaf through the knives.

CAUTION

NEVER PUSH THE HAND LEVER.
DOING SO MAY RESULT IN DAMAGE TO THE MACHINE'S COMPONENTS.

777-N Variety Slicer

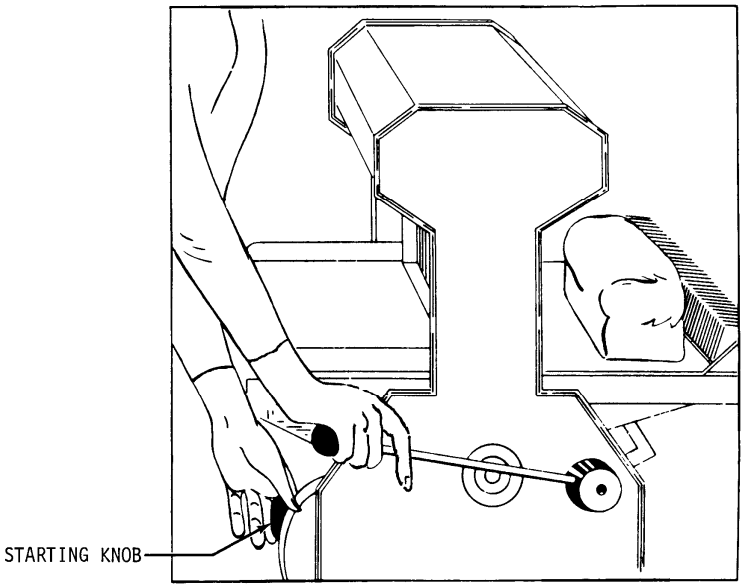

CAUTION

THE KNIVES ARE EXTREMELY SHARP.
DO NOT TOUCH MOVING OR STATIONARY KNIVES.

The motor and slicer knives will stop automatically when the pusher comes to its full forward position. Remove the loaf from the table and bag or wrap the product. Use the same procedure for each loaf.

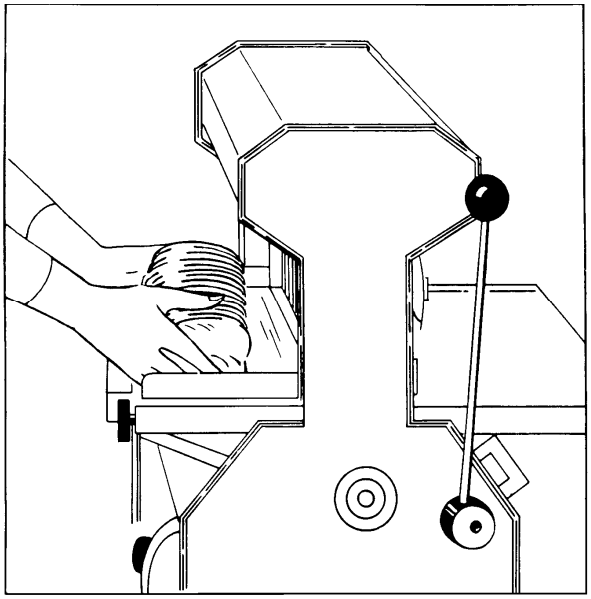

3236 Wilson Drive NW, Walker, MI 49534
800-253-3893 | www.oliverquality.com

777-N Variety Slicer

TROUBLESHOOTING

WARNING

ALWAYS DISCONNECT THE SLICER FROM THE POWER SUPPLY BEFORE ATTEMPTING ANY TYPE OF MAINTENANCE TASK, INCLUDING TROUBLESHOOTING.

The Slicer Will Not Start (Motor Is Not Humming)

- The machine is not plugged in.
- There is no power at the outlet. (Check by plugging in a small working appliance, like a lamp. Check to see if a circuit breaker has tripped. If the circuit breaker has not tripped and the circuit is still not working have a qualified electrician check the circuit.)
- The motor switch overload has tripped. (To reset push firmly in the direction shown on the switch nameplate.)
- There are bread crumbs in the motor starting switch. (Have a qualified electrician disassemble the switch and clean it.)
- The switch arm on the Switch Trip Mechanism is bent. (A qualified service agent can bend the arm to correct the problem, see the illustration below.)

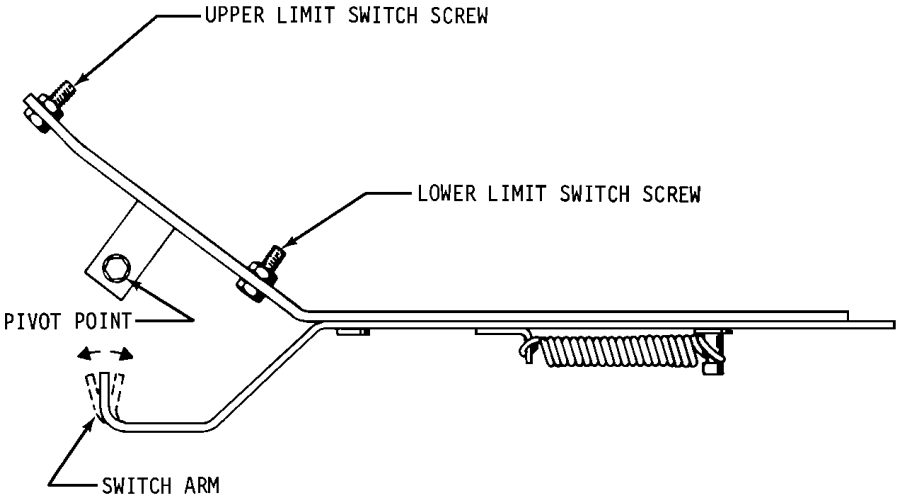

- The switch trip mechanism is binding. (Clean the mechanism and lubricate its pivot point, see above illustration.)
-

- The upper limit switch is not being made. (Adjust the limit switch screws as required to correct the problem, see above illustration.)

The Slicer Will Not Start (Motor Is Humming)

CAUTION

DO NOT ALLOW THE MOTOR TO HUM WITHOUT STARTING.
THE MOTOR CAN BE PERMANENTLY DAMAGED BY OVERHEATING.

- The motor has failed. (Have it checked by a qualified electrician.)

NOTE

A SPECIAL NON-VENTILATED MOTOR MUST BE USED WITH THIS SLICER.

- The drive system is binding. (Have a qualified service agent check for defective bearings or other restrictions to free movement.)

- There is mechanical interference between other parts of the slicer. (Have a qualified service agent evaluate the machine for adjustment or replacement of defective parts.)

The Slicer Starts Without Pulling the Knob

- The switch arm on the Switch Trip Mechanism is bent. (A qualified service agent can bend the arm to correct the problem, see the illustration in the “The Slicer Will Not Start” section above.)

The Slicer Does Not Stop When Slicing is Complete

- Either one or both of the upper and lower limit switch screws on the limit switch trip mechanism are out of adjustment. (Adjust the limit switch screws as required to correct the problem, see the illustration in the “The Slicer Will Not Start”, section above.)

The Slicer Stops Before Slicing Starts or is Complete

- The lower limit switch screw on the limit switch trip mechanism is out of adjustment. (Adjust the screw as required to correct the problem, see the illustration in the “The Slicer Will Not Start”, section above.)

- The switch trip mechanism is binding. (Clean the mechanism and lubricate its pivot point, see the illustration in the “The Slicer Will Not Start”, section above.)

777-N Variety Slicer

Bread Slices Vary in Thickness

- The blade frames are out of adjustment. (See the “Maintenance” section of this manual under “Adjusting the Blade Frames When Slices Vary in Thickness” on how to perform this adjustment.)

The Blade Frames Are Knocking

- The blade frames are out of adjustment. (See the “Maintenance” section of this manual under “Adjusting the Clearance Between the Blade Frames” on how to perform this adjustment.)

3236 Wilson Drive NW, Walker, MI 49534
800-253-3893 | www.oliverquality.com

777-N Variety Slicer

MAINTENANCE

WARNING

ALWAYS DISCONNECT THE SLICER FROM THE POWER SUPPLY BEFORE ATTEMPTING ANY TYPE OF MAINTENANCE TASK.

Cleaning

Use a mild detergent solution to clean all exterior surfaces and empty the crumb tray daily or more often if necessary. Periodically remove both tables and the crumb chute and then brush, blow, (if compressed air is available), or wipe all foreign material from all surfaces, especially from moving parts.

Lubrication

Once a month, more often during heavy use, put a drop of food approved lubricant on each of the pivot points of the plastic links at the top to the blade frames. Also add a drop or two of the same food approved lubricant to the switch trip mechanism pivot point, pusher lever and yoke pivots. All other bearings are either grease packed or sealed and seldom need attention.

NOTE

NEVER OIL OR GREASE THE MOTOR.

Removing the Blade Frames

To remove the blade frames you must first remove the infeed table, crumb chute, and discharge table. First remove the four black knobs securing the tables, (see the illustration below). In addition to the knobs the infeed and discharge tables are held in place by friction so pull the infeed table straight out and hard to separate them.

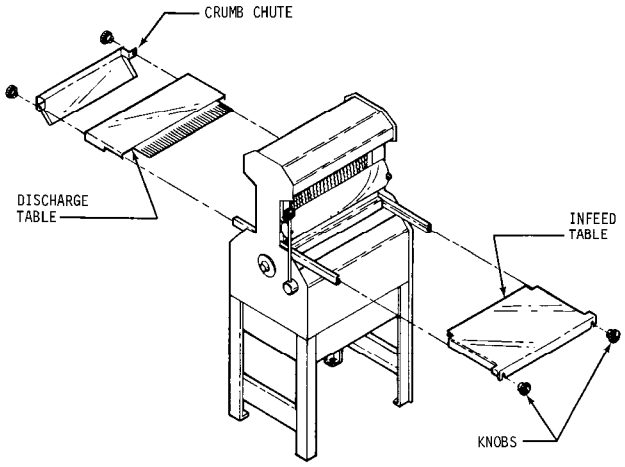

777-N Variety Slicer

Removing the Blade Frames (Continued)

Always start by removing the discharge side blade frame first. Both blade frames should be removed from the discharge side of the machine. You should remove the discharge side blade frame completely from the machine before starting on the infeed side blade frame. However each is removed using similar procedures.

NOTE

NEVER LOOSEN THE NUTS ON THE ECCENTRIC PINS OR ATTEMPT TO REMOVE THEM TO AID IN REMOVING THE BLADE FRAMES.

Start by pulling the hairpin clip from the eccentric pin, located at the top of each blade frame, see illustration below, then slide the top link toward the lever side of the slicer. Make sure that the link is forced all the way over to the cross member.

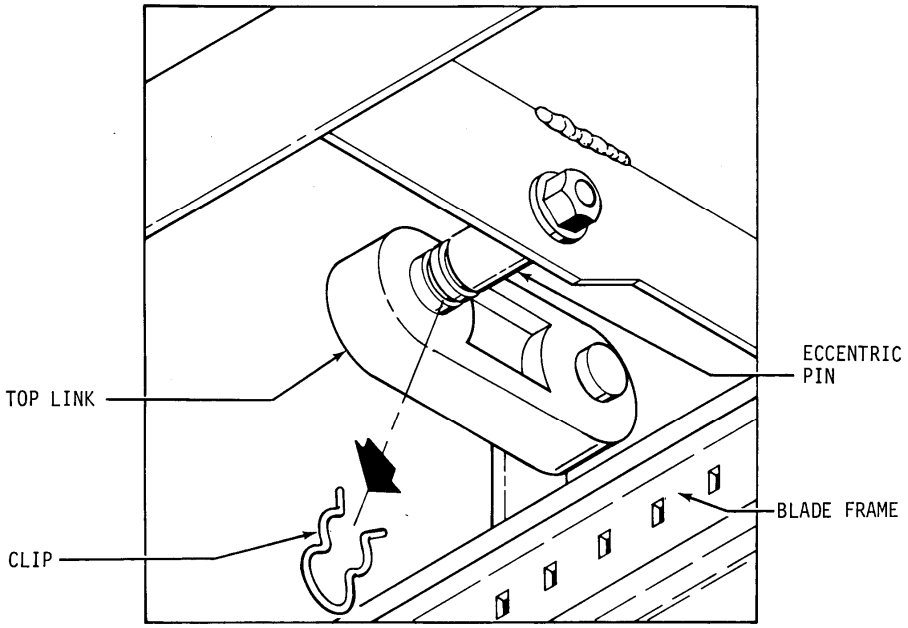

Next remove the two locking cams, eye bolts, with belleville washers, from the bottom of the blade frame, they secure the frame to the rocker's swing shaft. The eye bolts can be removed by turning them counter clockwise once the cams have been removed. See the next illustration.

777-N Variety Slicer

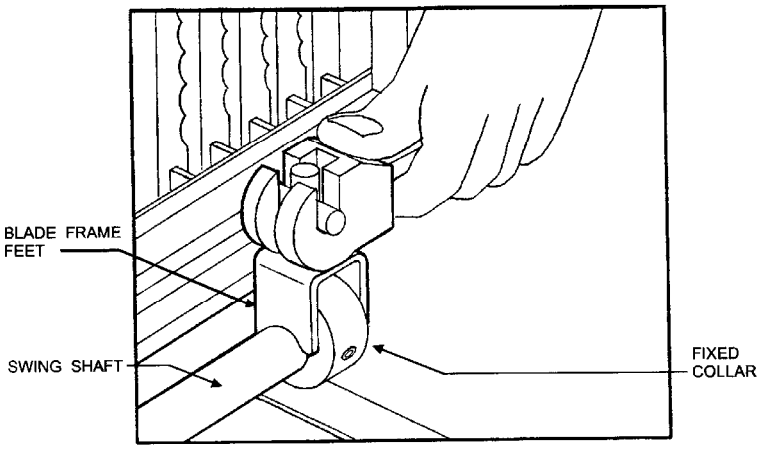

CAUTION

THE BLADES ARE EXTREMELY SHARP.
ALWAYS HANDLE BLADE FRAMES WITH CARE.

The blade frame can now be carefully lifted from the slicer. See below. The remaining blade frame can be removed in the same manner.

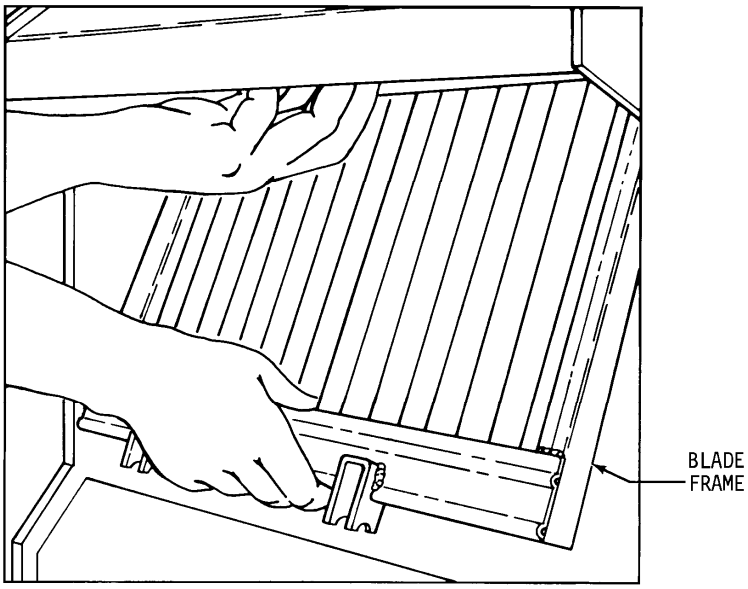

777-N Variety Slicer

Replacing the Blade Frames

Replacement of the blade frames is done by reversing the removal procedures. Ensure That the feet of the blade frames rest snuggly on the swing shafts and that you have included the belleville washers with the eye bolts.

NOTE

WHEN INSTALLING THE BELLEVILLE WASHERS, THEY MUST BE PLACED SO THAT THE CROWN IS UP AS SHOWN IN THE ILLUSTRATION BELOW.

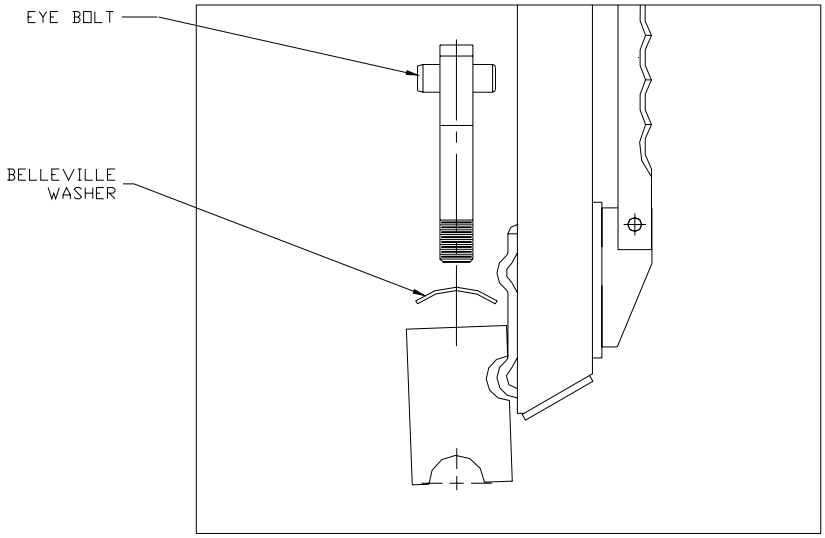

When replacing the eye bolts turn them clockwise until moderate pressure is required to close the cam. If the cam is to easy to close rotate the eye bolt a half turn more in the clockwise direction and try to reinstall the cam. Repeat these partial rotations until moderate pressure is required to close the cam. If the cams are either difficult or impossible to close, rotate the eye bolt a half turn in the counter clockwise direction. Repeat until the cams can be closed using moderate pressure.

3236 Wilson Drive NW, Walker, MI 49534
800-253-3893 | www.oliverquality.com

777-N Variety Slicer

Changing the Blades

CAUTION

THE BLADES ARE EXTREMELY SHARP. ALWAYS HANDLE THEM WITH CARE.

NOTE

DO NOT INTERCHANGE THE TWO BLADE FRAMES. REPLACE THE BLADE FRAME TO THE SAME SIDE OF THE MACHINE AS IT WAS TAKEN FROM

NOTE

WHEN CHAINGING BLADES FIRST NOTE THE DIRECTION THE SHARPENED EDGES ARE FACING ON THE BLADE FRAME. THEY ARE FACING UP ON ONE FRAME AND DOWN ON THE OTHER. DO NOT CHANGE THIS DIRECTION.

Place the blade frame on a flat surface. You may use the special knife tool, shown in the illustration below, or use a common set of pliers to depress the spring-loaded pin holding each knife. This will reduce the tension on the knife so that it may be easily removed.

In the illustration below you can see the use of the knife tool. It is inserted into the blade frame on the spring-loaded pin end and then by lifting up on the tool it will deflect the upper spring-loaded pin reducing the tension on the knife. Once this has been done the knife can be carefully removed.

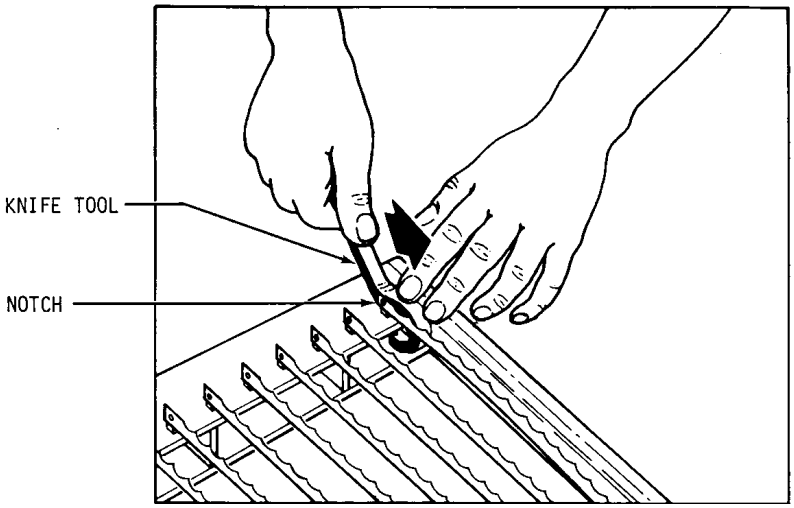

Rev. 2/15/05

777-N Variety Slicer

Changing the Blades (Continued)

The new knife can be installed by reversing the removal procedure. A paper clip can be used to hold the knife in position on the lower pin to ease installation. See the illustration below.

NOTE

WHEN REPLACING ALL THE KNIVES, ALWAYS REMOVE THE CENTER KNIVES FIRST AND WORK TOWARD THE ENDS. INSTALL THE NEW KNIVES AT THE ENDS FIRST AND WORK ALTERNATELY TOWARD THE CENTER.

CAUTION

NEVER PUT BLADE FRAMES IN THE SLICER WITHOUT KNIVES.

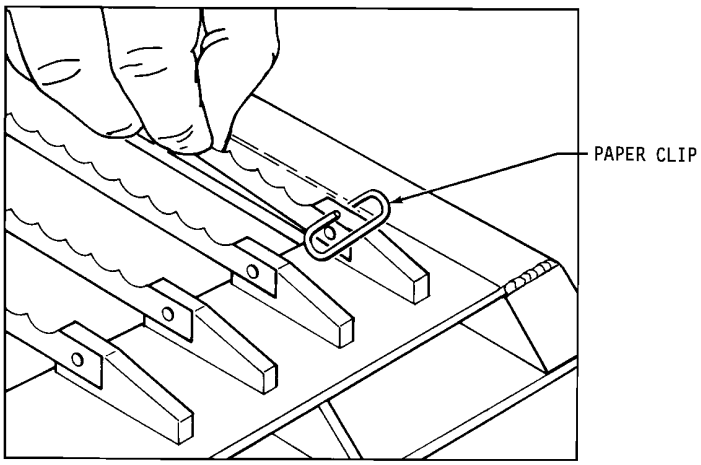

777-N Variety Slicer

Tightening the Belt

CAUTION

OVER-TIGHTENING THE DRIVE BELT
MAY CAUSE BEARING OR MOTOR FAILURE.

Remove the crumb tray from the slicer. Locate the adjustment nut at the lower end of the motor mounting plate, see below. Turn the adjustment nut clockwise with a wrench to increase tension on the drive belt. To reduce tension, turn the adjusting nut counterclockwise. The drive belt should be just tight enough, using moderate finger pressure, to allow a 3/8 inch deflection halfway between the motor drive pulley and the driven pulley.

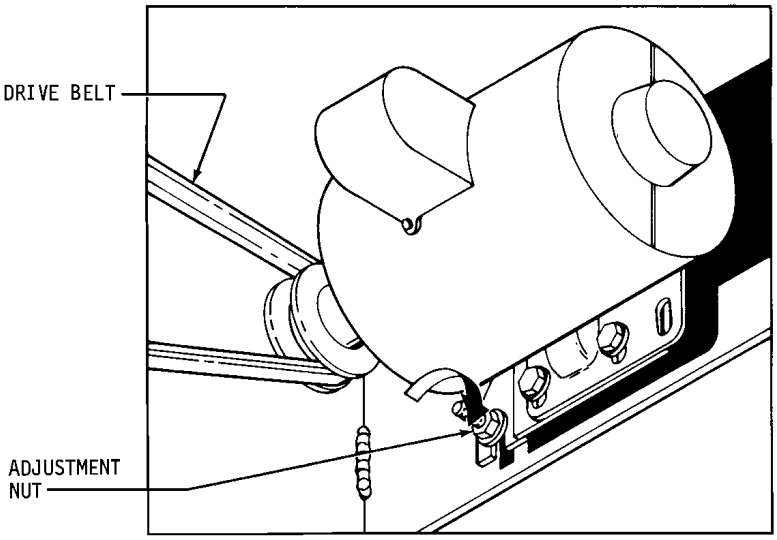

777-N Variety Slicer

Replacing the Belt

Remove the infeed table, crumb chute, and discharge table. First remove the four black knobs securing the tables, (see the illustration below). In addition to the knobs the infeed and discharge tables are held in place by friction so pull the infeed table straight out and hard to separate them.

Turn the adjustment nut, at the lower end of the motor mounting plate, counterclockwise with a wrench to loosen the drive belt, see “Tightening the Belt” above.

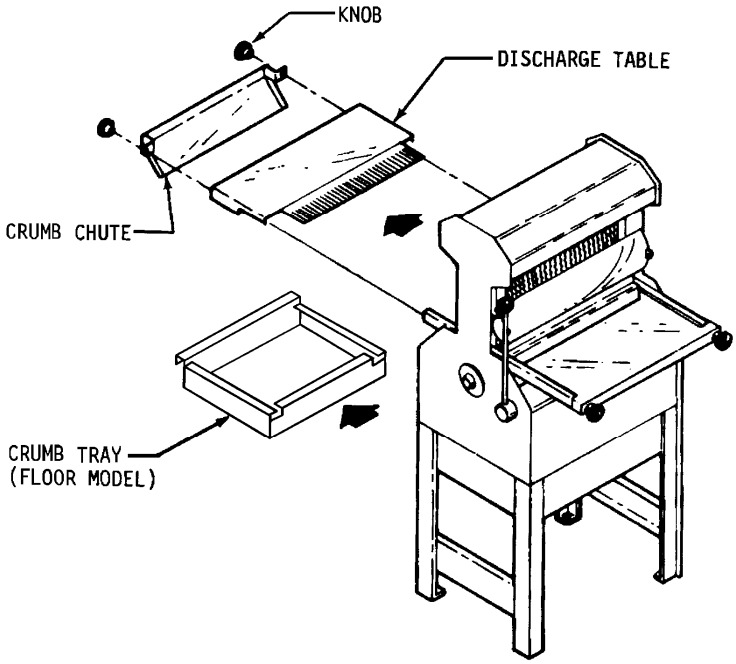

Disconnect the end of the connecting rod at the rocker by removing the two cap screws and cap as shown below. The drive belt may now be removed from the pulleys

777-N Variety Slicer

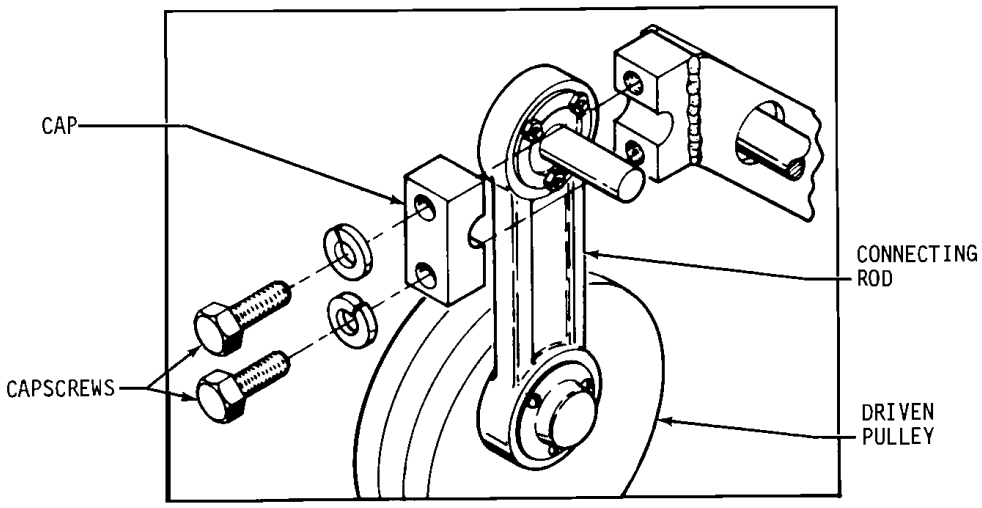

The new belt can be installed by reversing the removal procedure. Refer to the "Tightening the Belt" section to adjust the tension on the drive belt.

Adjusting the Blade Frames When Slices Vary in Thickness

Remove the discharge table from the slicer. Loosen, but, do not remove the two locking cams which secure the blade frame to the swing shaft. Remove the plastic plug over the set screw in the fixed collar, see below. Using an allen wrench, loosen, do not remove the set screw in the fixed collar. Using a ruler, (15" maximum), measure the distance between the blades. Gently tap the collar with a small mallet either to the right or left until the distances between the blades are equal. When satisfied with the location tighten the fixed collar's set screw and replace the plastic plug. Lastly tighten the two locking cams which secure the blade frame.

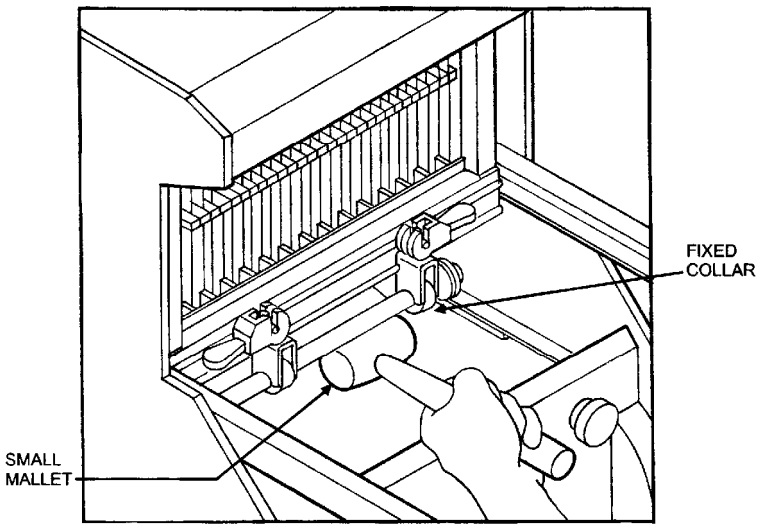

777-N Variety Slicer

Adjusting the Clearance Between the Blade Frames

The distance between the blade frames is adjusted by rotating the eccentric pins located above the blade frames. Two wrenches are used to do this. One wrench is used to keep the eccentric pin from rotating while the second is used to loosen the lock nut on the end of the pin. This nut secures the pin in position once its proper location is determined. See the illustration below.

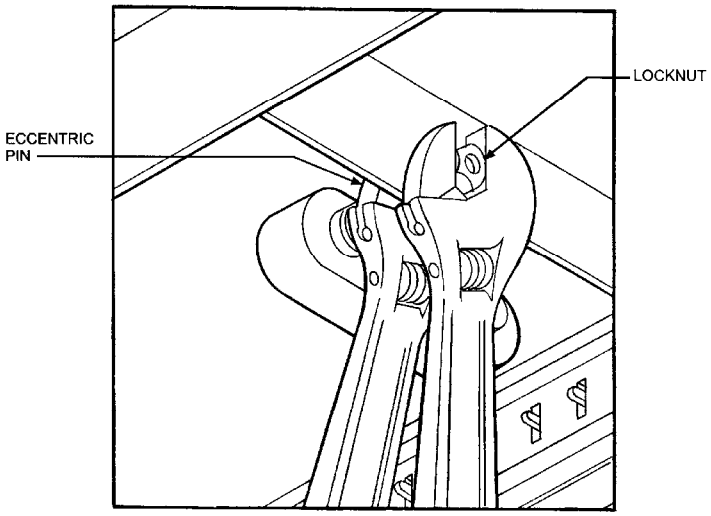

To adjust the eccentric, once the lock nut is loosened, rotate the pin using the wrench used to hold the pin. Rotate the pin, (it is possible that both pins will need adjustment at the same time), until the knives of the machine are in line within a 1/32 of an inch, (alternating blades should not appear be in front of or behind each other when viewed from the side). It is easiest to view this alignment my placing a straight edge horizontally along the blades midway between the ends of the blade on the blade's dull side, (discharge side), when the blade frames are inline or level. When the eccentric pins are in the desired position tighten each of the lock nuts to secure the position of the eccentrics. Check the blade frame clearance by turning the driven pulley by hand.

OLIVER®
Helping People Feed People

3236 Wilson Drive NW, Walker, MI 49534
800-253-3893 | www.oliverquality.com

777-N Variety Slicer

RECOMMENDED SPARE PARTS

PART NUMBER	PART DESCRIPTION	NO. REQ'D
5835-7705	Clip-Haripin	2
0730-0031	Pin-Eccentric	2
0797-0059-2	Pin- STST Metric Blade Frame	2
0711-0002	Link-Top	2
5601-1119*	Belt-V 4L290 (60 Cycle Machines)	1
5709-1137*	Switch-Starter (1 Phase Machines)	1
5220-5001	Bearing-Driven Pulley (With Snap Ring)	1
5220-5040	Bearing-Driven Pulley	1
0797-0058-019	Stud-Driven Pulley	1
6904-6001	Gasket-Driven Pulley	1
0797-0071-4	Rod-Connecting	1
0797-0057-219	Stud-Swing	1
5220-4040	Bearing-Rocker Shaft	2
5220-0042	Bearing-Swing Shaft	4
6301-3609*	Motor-1/2 HP, 1-60-115/230	1
5757-8140	Switch-Limit	1

***For Other Electrics Contact the Factory**

For Service Parts Call Oliver Products @ 800-253-3893

Rev. 1/20/09

3236 Wilson Drive NW, Walker, MI 49534
800-253-3893 | www.oliverquality.com

777-N Variety Slicer

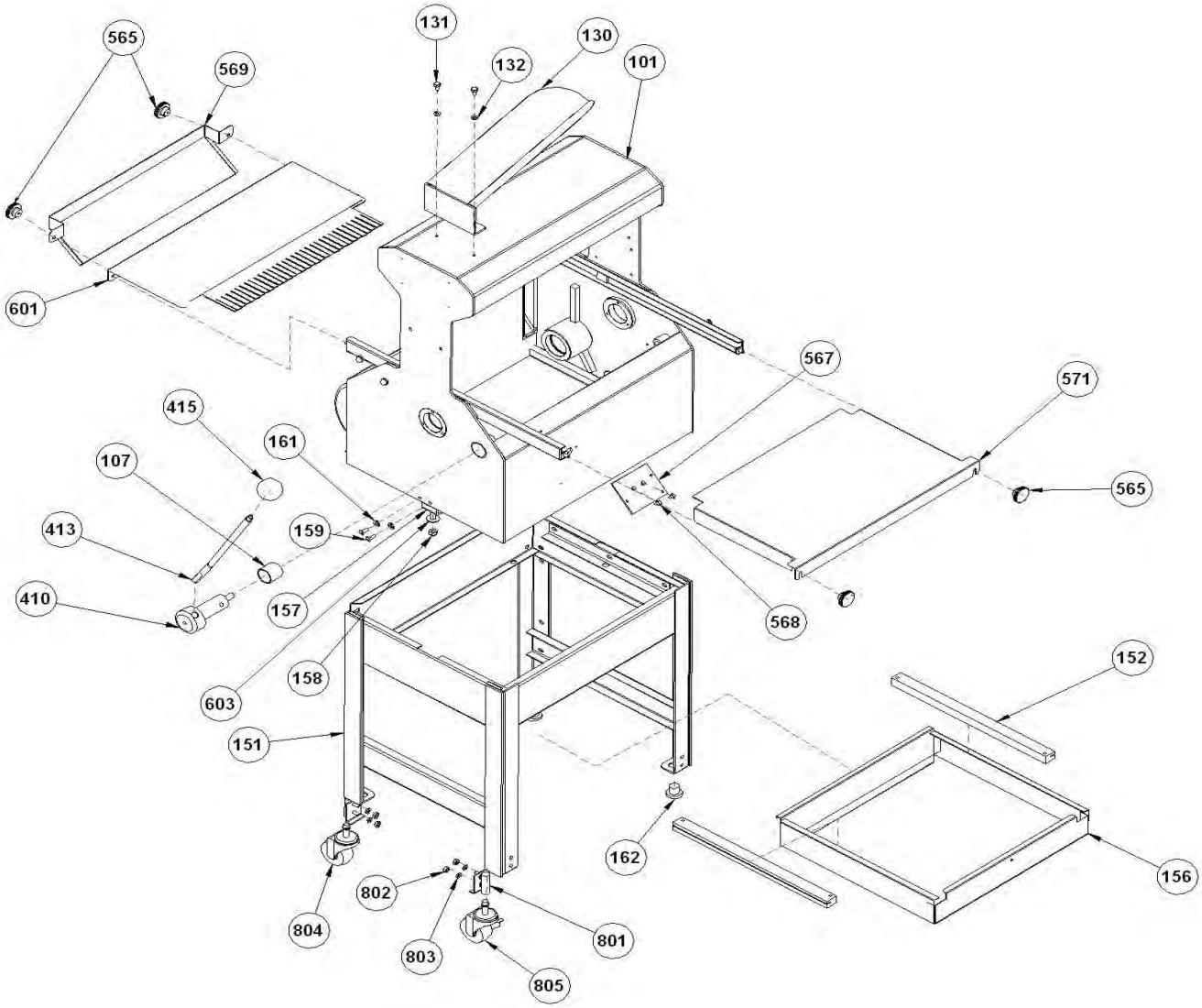

REV. 3/30/09

OLIVER®
Helping People Feed People

3236 Wilson Drive NW, Walker, MI 49534
800-253-3893 | www.oliverquality.com

777-N Variety Slicer

MECHANICAL REPLACEMENT PARTS LIST
EXPLODED VIEW (FRAME & BASE)

ITEM NO	PART DESCRIPTION	PART NUMBER	QUANTITY
101	NEW STYLE FRAME	0777-0001-3	1
107	BUSHING	0777-0063	1
130	BAGGING SCOOP-TOP MTG (shown) SIDE MTG (not shown) BAGGING SCOOP (not shown)	0797-2048-002 0797-2048-003 0777-1079	1
131	SCREW-HEX HD ¼-20 X ¾ STST	5843-1001	2
132	WASHER-LOCK ¼" STST SPRIN	5851-9357	2
151	TRIMLESS BASE	0777-0950-002	1
152	SLIDE – DRAWER	0777-0948	2
156	TRAY-EX CAP CRUMB	0777-0949	1
157	HOLDER-FRAME WITH STUD (NSF)	0777-0046-101	2
158	NUT-ACCORN 3/8-16 NC STST	5832-0587	2
159	SCREW – RDHD SL STST ¼-20X 5/8	5843-5255	4
160	WASHER-FLAT 3/8" 18-8 STST	5851-9306	2
161	WASHER-LOCK 5/16" STST 18-8	5851-9358	4
162	BUMPER-#242ATLANTIC INDIA RBBR	5902-0001	4
410	HUB-PUSHER	0777-0121-1	1
413	LEVER-PUSHER	0711-0024	1
415	KNOB-BALL 1-7/8" DIA 3/8-24BR INS	5911-7002	1
565	KNOB-KNRLD ¼-20 TAP 1-3/8 DIA	5911-7000	4

For Service Parts Call Oliver Products @ 800-253-3893

REV. 3/30/09

3236 Wilson Drive NW, Walker, MI 49534
800-253-3893 | www.oliverquality.com

MECHANICAL REPLACEMENT PARTS LIST
EXPLODED VIEW (FRAME & BASE
(CONTINUED)

ITEM NO	PART DESCRIPTION	PART NUMBER	QUANTITY
567	PLATE-SWITCH	0777-0898-001	1
568	SCREW FLAT HD 10-24 X 3/8 STST	5843-5067	2
569	CHUTE	0777-0073-1	1
571	TABLE – INFEED	0777-0074-001	1
601*	TABLE	0777-0024-0XX	1
801	BRACKET-CASTER MTG	0777-0947-001	4
802	NUT – ACCORN ¼-20NC STST	5832-0520	8
803	WASHER LOCK ¼" STST SPRING	5851-9357	8
804	CASTER-SWIVEL 2-1/2" DIA (NSF)	5902-2347	2
805	CASTER-SWIVEL 2-1/2" W/BRK. (NSF)	5902-2348	2

* Specify Slice Thickness

For Service Parts Call Oliver Products @ 800-253-3893

REV 3/30/09

3236 Wilson Drive NW, Walker, MI 49534
800-253-3893 | www.oliverquality.com

777-N Variety Slicer

(HOLDDOWN & PUSHER)

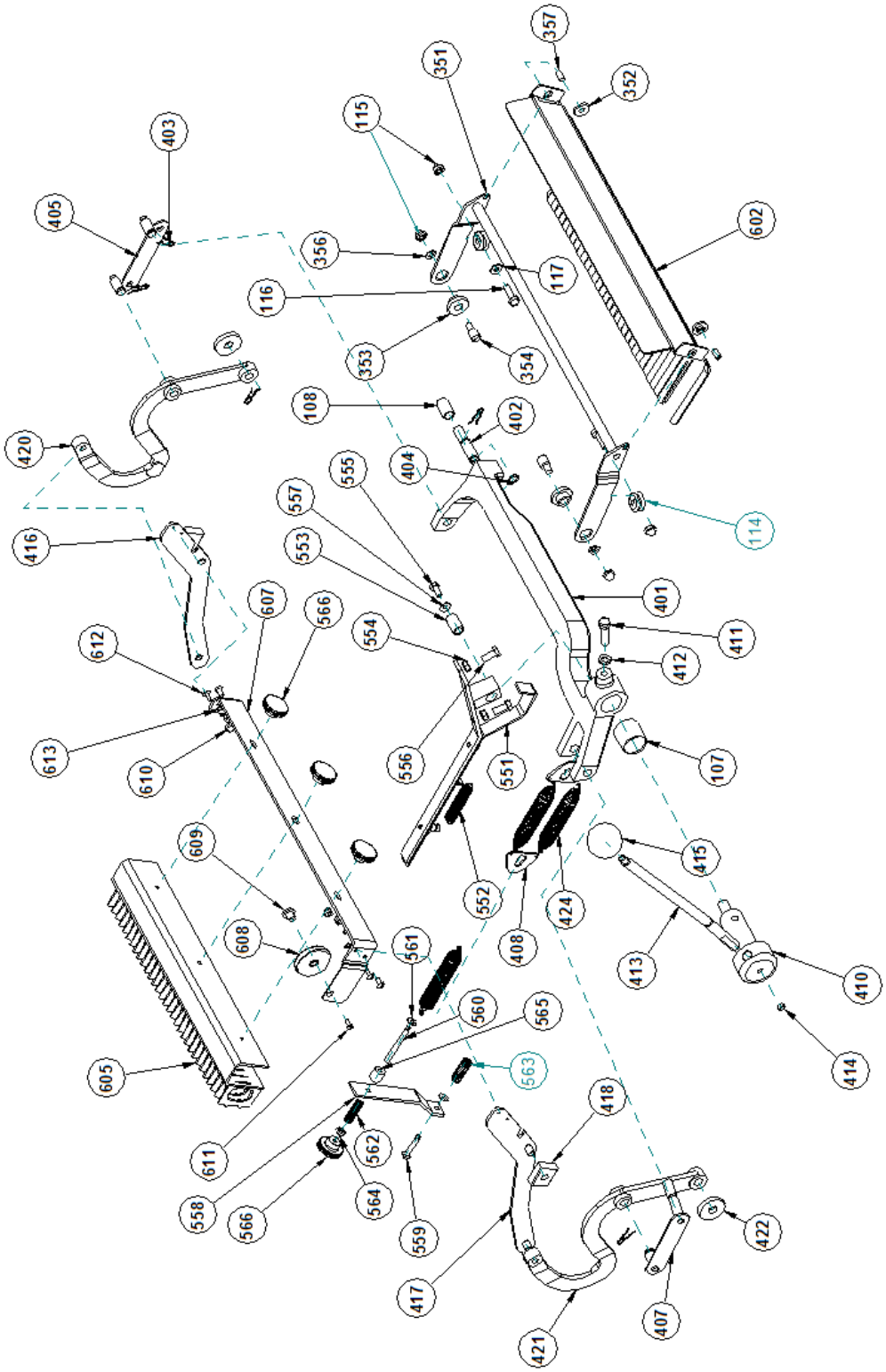

OLIVER®
Helping People Feed People

3236 Wilson Drive NW, Walker, MI 49534
800-253-3893 | www.oliverquality.com

777-N Variety Slicer
(HOLDDOWN & PUSHER)

ITEM NO	PART DESCRIPTION	PART NUMBER	QUANTITY
105	HAIRPIN CLIP 3/8" GROOVE DIA.	5835-7705	5
107	BUSHING	0777-0063	1
108	BUSHING	5257-0568	1
114	GROMMET-5/16ID X 3/4MD ATIND#167	5767-1200	2
115	NUT-ACCORN 5/16-18 NC STST	5832-0584	4
116	SCREW-FLAT HD 5/16-18 X 1" STST	5843-5099	2
117	WASHER-LOCK 5/16" STST 18-8	5851-9358	2
351	FRAME-HOLDDOWN	0777-0975-1	1
352	BUSHING	0777-0065	2
353	BUSHING	0777-0066	2
354	SCREW-PIVOT	0777-0068-001	2
356	WASHER-LOCK 5/16" STST 18-8	5851-9358	2
357	STUD-HOLDDOWN PIVOT	0777-0067-001	2
401	YOKE-SWING (PWDR COATED WHITE)	0777-0078-001	1
402	PIN-YOKE	0777-0033-001	1
404	RING-RETAINING TRUARC#5100-50H	5840-2837	1
405	LINK-PUSHER (STST)	0777-0912-001	1
407	LINK-PUSHER (STST)	0777-013-001	1
408	CLIP-STST	0777-0085-001	2

For Service Parts Call Oliver Products @ 800-253-3893

REV. 8/8/24

3236 Wilson Drive NW, Walker, MI 49534
800-253-3893 | www.oliverquality.com

777-N Variety Slicer
(HOLDDOWN & PUSHER)
(CONTINUED)

ITEM NO	PART DESCRIPTION	PART NUMBER	QUANTITY
410	HUB-PUSHER	0777-0121-1	1
411	SCREW-HEX HD 3/8-24X1-1/2 STST	5843-1306	1
412	WASHER-3/8 STST MD SPRNG LOCK	5851-9359	1
413	LEVER-PUSHER	0711-0024	1
414	SCREW-SOCSET CUPPT 3 /8 X 3/8 NC	5842-6158	1
415	KNOB-BALL 1-7/8”DIA 3/8-24BR INS	5911-7002	1
416	ARM-PUSHER RH	0777-0077-1001	1
417	ARM-PUSHER LH	0777-0077-1002	1
418	BLOCK-777 SLIDE PER PRINT	5500-2800	2
420	ARM-FRONT ASSM	0777-0082-1001	1
421	ARM-REAR ASSM	0777-0082-1002	1
422	WASHER-DELRIN SPACER	0777-0920	2
424	SPRING-STD. 25/32x4-1/8 PRINT	7025-5102	3
551	ARM-SWITCH OPERATOR	0777-0119-2	1
552	SPRING-STD. 9/16x2 13/16 PRINT	4605-1000-003	1
553	BEARING-SINT BRNZ SLV	5254-0167	1
554	NUT-HEX FULL 5/16-18NC FIN STST	5832-0521	2
555	SCREW-HEX HD ¼-20 X 5/8 STST	5843-1002	1
556	SCREW-HEX HD 5/16-18 X ¾	5842-1528	2

Rev.4/11/18

For Service Parts Call Oliver Products @ 800-253-3893

OLIVER®
Helping People Feed People

3236 Wilson Drive NW, Walker, MI 49534
800-253-3893 | www.oliverquality.com

777-N Variety Slicer
(HOLDDOWN & PUSHER)
(CONTINUED)

ITEM NO	PART DESCRIPTION	PART NUMBER	QUANTITY
557	WASHER-1/4" FLAT 18-8 STST	5851-9304	1
558	STOP-ARM	0777-0120-001	1
559	STUD-STOP	0777-0973	1
560	STUD-KNOB	0777-0974	1
561	WASHER-HORSESHOE	0793-0084	2
562	SPRING	7012-3002	1
563	SPRING	7012-3103	1
564	NUT-HX FULL ¼-20NC STST FIN.	5832-0520	1
565	BUSHING-RUBBR1/4x5/8x5/8#1069	5902-0100	4
566	KNOB - KNRLD 1/4-20 TAP 1 3/8"DIA	5911-7000	4
602*	HOLDDOWN-GUIDE- SLICE SIZE	0777-0976-0XX	1
605*	PUSHER ASS'Y (SLICE SIZE)	0777-0978-0XX	1
607	BAR-PUSHER (777-N)	0777-0979	1
608	ROLLER	0777-0982	1
609	AXLE	0777-0983	1
610	NUT-ACCORN 3/16 {10-24} STST	5832-0585	4
611	SCREW FLAT HD 10-24 X 3/8 STST	5843-5067	1
612	SCREW-SLTD TRSHD MACH 10x1/2SS	5843-5385	4
613	WASHER-#10 STST INTRNL TTH LOCK	5851-9394	4

*SPECIFY SLICE THICKNESS
For Service Parts Call Oliver Products @ 800-253-3893

REV. 04/23/18

3236 Wilson Drive NW, Walker, MI 49534
800-253-3893 | www.oliverquality.com

777-N Variety Slicer

(ROCKER & PULLEY)

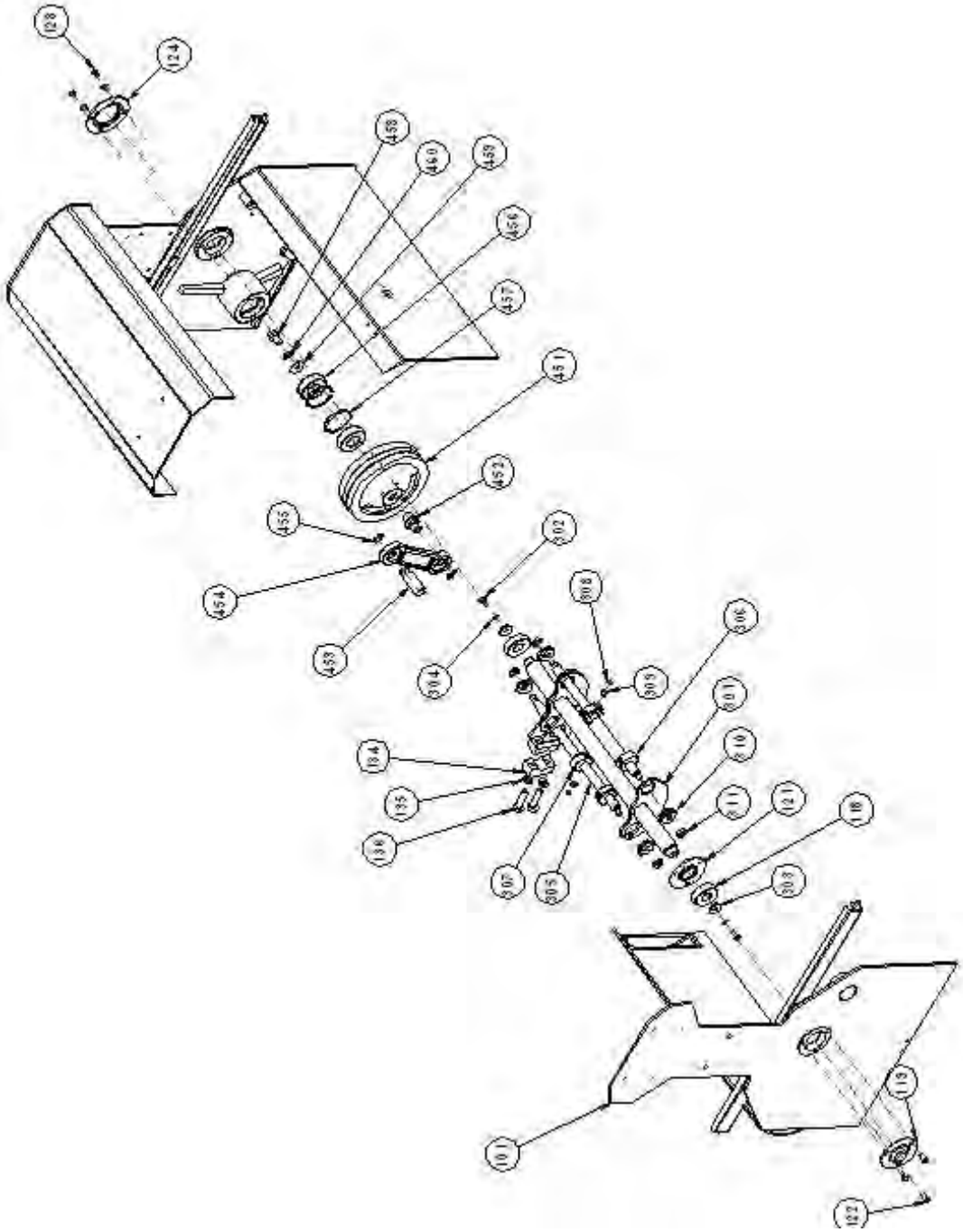

3236 Wilson Drive NW, Walker, MI 49534
800-253-3893 | www.oliverquality.com

777-N Variety Slicer

(ROCKER & PULLEY)

ITEM NO	PART DESCRIPTION	PART NUMBER	QUANTITY
101	NEW STYLE FRAME (NT)	0777-0001-3	1
118	BEARING-BALL 20x47x14 2 SEALS	5220-4040	2
119	CAP BALL BEARING	4090-0233-0023	2
121	CAP-PWDR COAT WHITE	4090-0233-0044	1
122	SCREW-RDHD SL STST ¼-20x5/8	5843-5255	6
124	CAP	4090-0244-0005	1
128	SCREW-RDHD SL STST ¼-20x1/4	5843-5251	4
134	CAP-CLAMP	0730-0023	1
135	WASHER-STST SPRING LOCK M10	8851-9468	2
136	SCREW-STST HEX HD M10 X 40MM	8843-0331	2
301	ROCKER (METRIC)	0777-0047-3	1
302	SCREW-HEX HD M6 X 16MM DIN 933	8842-0544	2
303	WASHER-STST FLAT M25.4	8851-8495	2
304	WASHER-SPRING LOCK M6 DIN 127B	8851-9414	2
305	SHAFT-SWING	0730-0024-001	2
306	COLLAR-HOLD DOWN	0797-0031-002	2
307	COLLAR-LOCATING	0797-0031-004	2

For Service Parts Call Oliver Products @ 800-253-3893

3236 Wilson Drive NW, Walker, MI 49534
800-253-3893 | www.oliverquality.com

777-N Variety Slicer

(ROCKER & PULLEY)
(CONTINUED)

ITEM NO	PART DESCRIPTION	PART NUMBER	QUANTITY
308	PLUG-THREADED	0797-0472	2
309	SCREW-SOCSET CUPPT 3/8x1/4 NF	5842-6540	2
310	BEARING-BALL-W/SNP RNG 10MMBR	5220-0042	4
311	NUT-STST HEX HD JAM M10 X 1.5	8832-0418	4
451	PULLEY-DRIVEN PLATED	0730-0005-001	1
452	STUD, STST	0797-0058-019	1
453	STUD-SWING	0797-0057-219	1
454	ROD-CONNECTING (MOLDED)	0797-0071-4	1
455	RING-SNAP (EXTERNAL)	5840-2825	2
456	BEARING-MET BALL SKF #6205-2RS	5220-5040	2
457	RING-RETAINING TRUARC#N5000-200	5840-1040	2
458	SCREW-HEX HD M10 X 20MM DIN933	8842-0583	1
459	WASHER-FLAT M10 DIN 9021	8851-8418	1
460	WASHER-SPRING LOCK M10 DIN127B	8851-9418	1

For Service Parts Call Oliver Products @ 800-253-3893

REV 5-17-24

3236 Wilson Drive NW, Walker, MI 49534
800-253-3893 | www.oliverquality.com

777-N Variety Slicer

(BLADE FRAME)

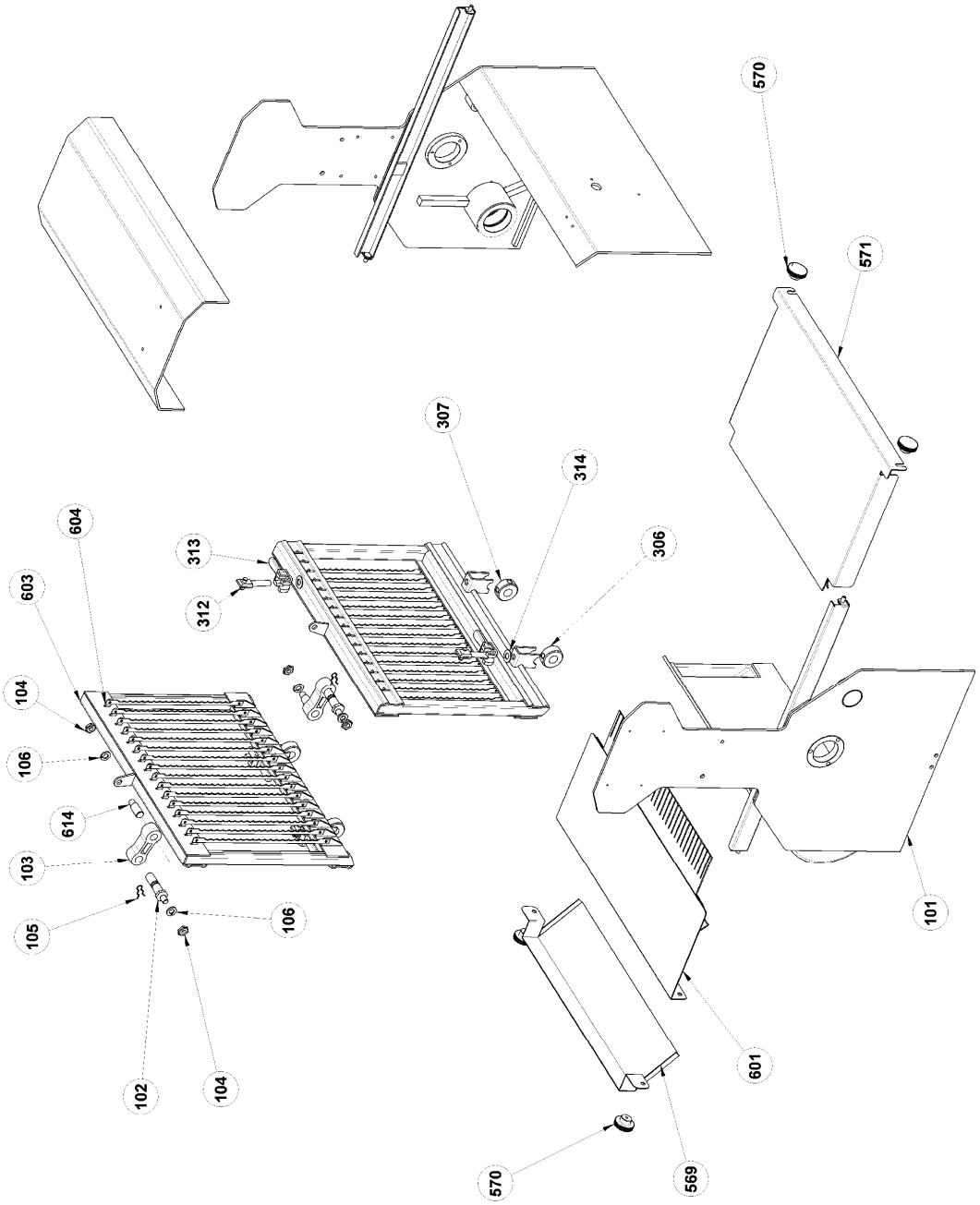

3236 Wilson Drive NW, Walker, MI 49534
800-253-3893 | www.oliverquality.com

777-N Variety Slicer

(BLADE FRAME)

ITEM NO	PART DESCRIPTION	PART NUMBER	QUANTITY
106	WASHER-STST SPRING LOCK M10	8851-9468	4
306	COLLAR-HOLD DOWN	0797-0031-002	2
307	COLLAR-LOCATING	0797-0031-003	2
312	BOLT-EYE	0777-0970	4
313	CAM	0777-0971	4
314	WASHER-7/8 STST BELLEVILLE SPRI	5852-0050	4
565	KNOB-KNRLD1/4-20TAP 1-3/8”DIA.	5911-7000	4
569	CHUTE	0777-0073-1	1
571	TABLE – INFEED	0777-0074-001	1
601*	TABLE	0777-0024-0XX	1
603*	BLADE FRAME	0797-0300-0XX	2
604	BLADE-TYPE A	0797-0029-1	*
614	PIN-STST METRIC BLADE FRAME	0797-0059-2	2

*SPECIFY SLICE THICKNESS

For Service Parts Call Oliver Products @ 800-253-3893

3236 Wilson Drive NW, Walker, MI 49534
800-253-3893 | www.oliverquality.com

ELECTRICAL SINGLE PHASE

Wiring Diagram (Single Phase)

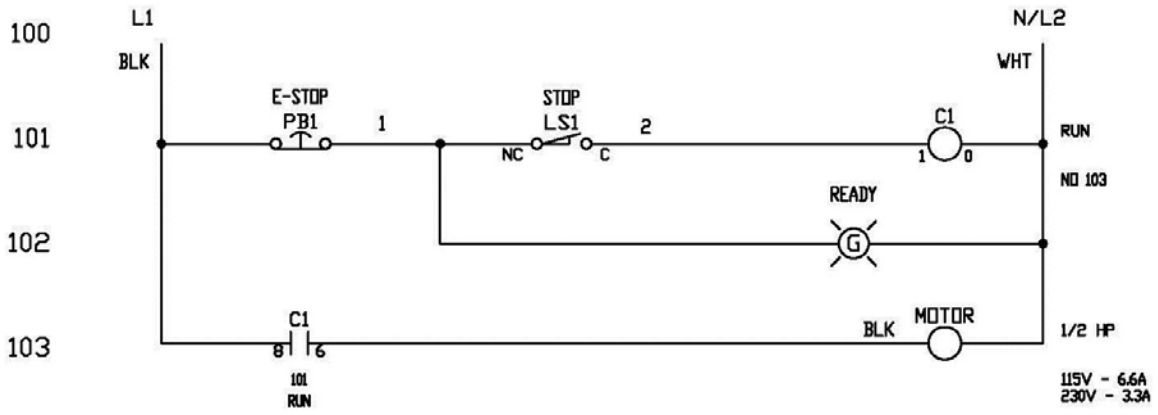

Parts List 1/2 HP, 115 VAC, 60 Hertz, 1 Phase

ITEM NO	PART DESCRIPTION	PART NUMBER
901	Motor-1/2 HP	6301-3609
910	Pulley-Motor	4575-7103-2001
913	Belt-V 4L290	5601-1119

Parts List 1/2 HP, 230 VAC, 60 Hertz, 1 Phase

ITEM NO	PART DESCRIPTION	PART NUMBER
901	Motor-1/2 HP	6301-3609
910	Pulley-Motor	4575-7103-2001
913	Belt-V 4L290	5601-1119

Parts List 1/2 HP, 220 VAC, 50 Hertz, 1 Phase

ITEM NO	PART DESCRIPTION	PART NUMBER
901	Motor-1/2 HP	6301-3940
910	Pulley-Motor	4575-7104-2004
913	Belt-V 4L290	5601-1120

3236 Wilson Drive NW, Walker, MI 49534
800-253-3893 | www.oliverquality.com

ELECTRICAL BOX ASSEMBLY DRAWING

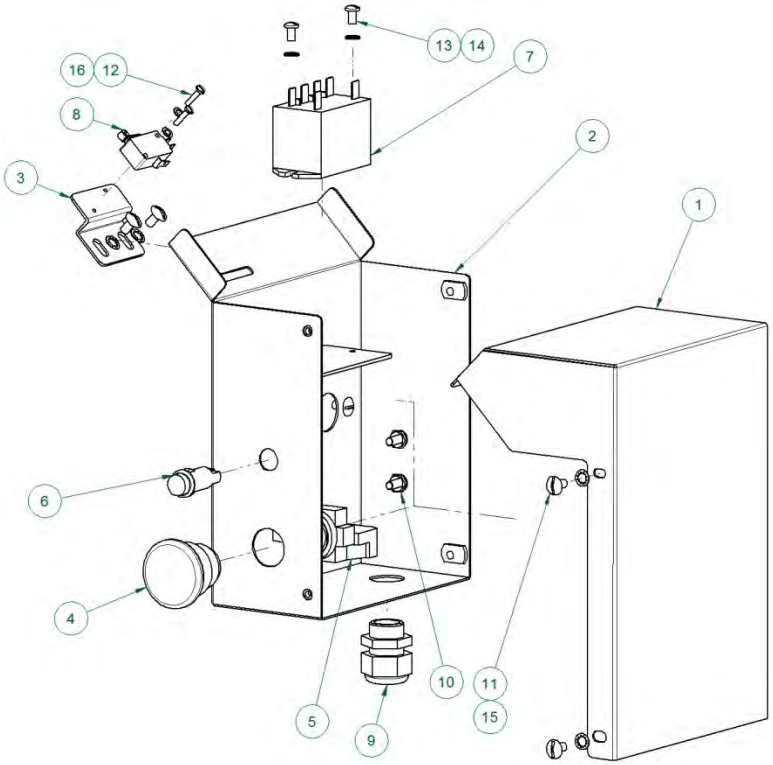

PARTS LIST

Item Number	Part Number	Description	Qty
1	0777-0272	COVER-ELECTRICAL BOX	1
2	0777-0273	WELDMENT-ELECTRICAL BOX	1
3	0777-0274	MOUNT-SWITCH	1
4	5708-7920	OPERATOR-P.B. MUSHROOM HD RED	1
5	5708-7931	BASE-MTG/BLOCK-CONTACT NC	1
6	5709-0011	LIGHT-PILOT 1/2" DIA SNAP-IN	1
7	5749-8027	RELAY	1
8	5757-8002	SWITCH-SM BASIC W/ ROLLER	1
9	5765-1120	STRAIN RELIEF M20 X 1.5	1
10	5832-0578	NUT - HEX MACHINE #10-24 STST	2
11	5843-5384	SCREW-TRUSS HEAD 10-24 x 3/8 STST	8
12	5843-5524	SCREW-PANHD SLOT 4-40 X 1/2	2
13	5843-5552	SCREW-PANHD SLOT 8-32 x 5/16 STST	2
14	5851-9130	WASHER-#8 SHKPRF INTTYPE LOCK	2
15	5851-9131	WASHER-#10 SHKPRF INTTYPE LOCK	12
16	5851-9391	WASHER-INT TOOTH #4	2

3236 Wilson Drive NW, Walker, MI 49534
800-253-3893 | www.oliverquality.com

777-N Variety Slicer

ELECTRICAL THREE PHASE

Wiring Diagram (Three Phase)

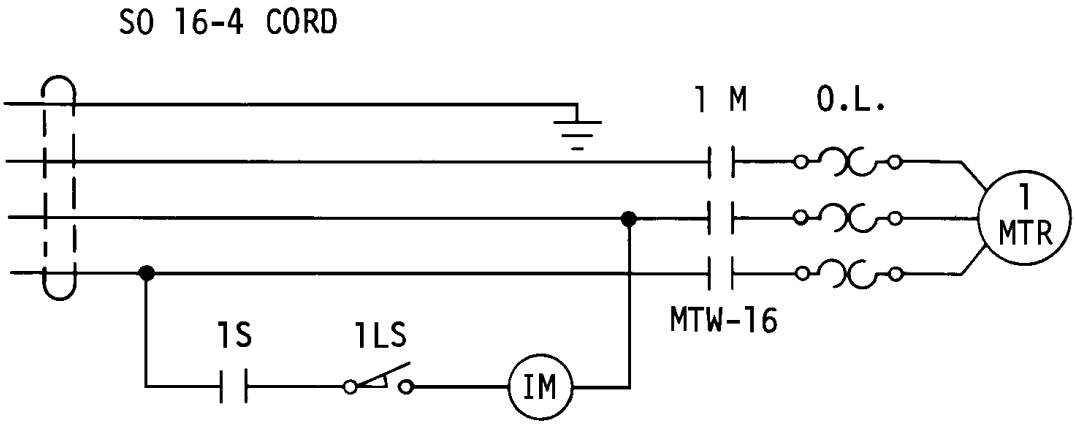

Assembly Drawing (Three Phase Electrics)

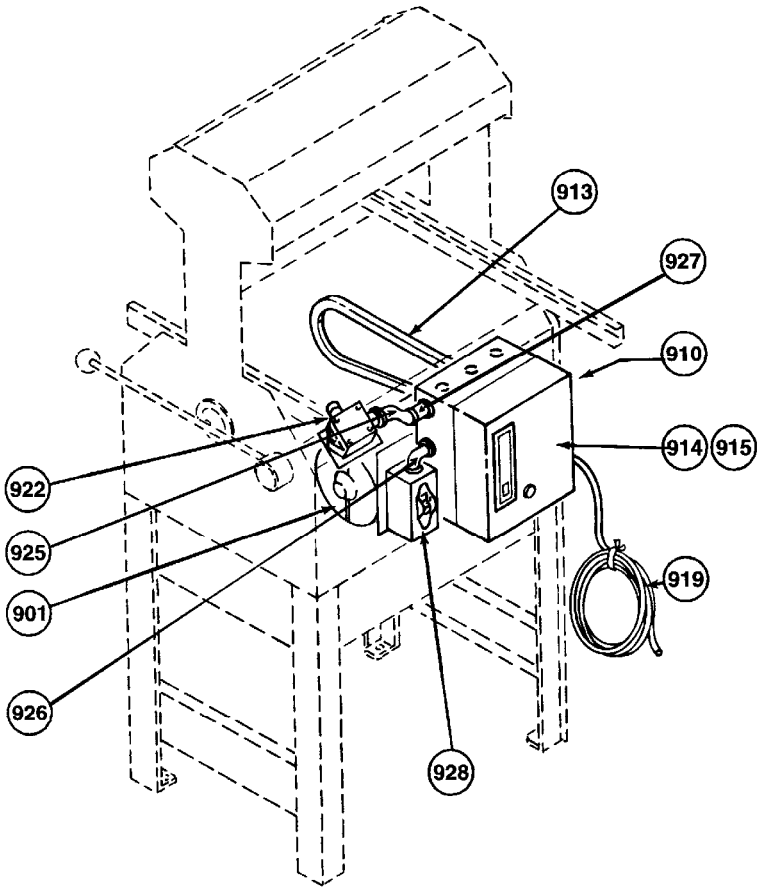

3236 Wilson Drive NW, Walker, MI 49534
800-253-3893 | www.oliverquality.com

777-N Variety Slicer

Parts List 1/2 HP, 230 VAC, 60 Hertz, 3 Phase

ITEM NO	PART DESCRIPTION	PART NUMBER
901	Motor-1/2 HP	6301-3800
910	Pulley-Motor	4575-7103-2003
913	Belt-V 4L290	5601-1119
914	Switch-Starter Magnetic	5709-8823
915	Heater-Overload	5708-2173
919	Cord-Power	
922	Switch-Limit	5757-8140
925	Fitting-Offset Nipple	
926	Fitting-90 Deg. Elbow	
927	Fitting-Straight	
928	Switch-Manual	5757-9325

Parts List 1/2 HP, 460 VAC, 60 Hertz, 3 Phase

ITEM NO	PART DESCRIPTION	PART NUMBER
901	Motor-1/2 HP	6301-3800
910	Pulley-Motor	4575-7103-2003
913	Belt-V 4L290	5601-1119
914	Switch-Starter Magnetic	5709-8827
915	Heater-Overload	5708-2166
919	Cord-Power	
922	Switch-Limit	5757-8140
925	Fitting-Offset Nipple	
926	Fitting-90 Deg. Elbow	
927	Fitting-Straight	
928	Switch-Manual	5757-9325

For Service Parts Call Oliver Products @ 800-253-3893

THIS PAGE WAS INTENTIONALLY
LEFT BLANK.

3236 Wilson Drive NW, Walker, MI 49534
800-253-3893 | www.oliverquality.com

WARRANTY

PARTS
Oliver Packaging & Equipment Company warrants that if any part of the equipment (other than a part not manufactured by Oliver) proves to be defective (as defined below) within two years after shipment, and if Buyer returns the defective part to Oliver Packaging & Equipment within two years, Freight Prepaid to Oliver Packaging & Equipment's plant in Grand Rapids, MI, then Oliver Packaging & Equipment, shall, at Oliver Packaging & Equipment's option, either repair or replace the defective part, at Oliver Packaging & Equipment's expense.

LABOR
Oliver Packaging & Equipment further warrants that equipment properly installed in accordance with our special instructions, which proves to be defective in material or workmanship under normal use within two (2) years from installation or two (2) years and three (3) months from actual shipment date, whichever date comes first, will be repaired by Oliver Packaging & Equipment or an Oliver Packaging & Equipment Authorized Service Dealer, in accordance with Oliver Packaging & Equipment's published Service Schedule.

For purposes of this warranty, a defective part or defective equipment is a part or equipment which is found by Oliver Packaging & Equipment to have been defective in materials workmanship, if the defect materially impairs the value of the equipment to Buyer. Oliver Packaging & Equipment has no obligation as to parts or components not manufactured by Oliver Packaging & Equipment, but Oliver Packaging & Equipment assigns to Buyer any warranties made to Oliver Packaging & Equipment by the manufacturer thereof.

This warranty **does not** apply to:
1. Damage caused by shipping or accident.
2. Damage resulting from improper installation or alteration.
3. Equipment misused, abused, altered, not maintained on a regular basis, operated carelessly, or used in abnormal conditions.
4. Equipment used in conjunction with products of other manufacturers unless such use is approved by Oliver Packaging & Equipment in writing.
5. Periodic maintenance of equipment, including but not limited to lubrication, replacement of wear items, and other adjustments required due to installation, set up, or normal wear.
6. Losses or damage resulting from malfunction.

The foregoing warranty is in lieu of all other warranties expressed or implied AND OLIVER PACKAGING & EQUIPMENT MAKES NO WARRANTY OF MERCHANTABILITY OR FITNESS FOR PURPOSE REGARDING THE EQUIPMENT COVERED BY THIS WARRANTY. Oliver Packaging & Equipment neither assumes nor authorizes any person to assume for it any other obligations or liability in connection with said equipment. OLIVER PACKAGING & EQUIPMENT SHALL NOT BE LIABLE FOR LOSS OF TIME, INCONVENIENCE, COMMERCIAL LOSS, INCIDENTAL OR CONSEQUENTIAL DAMAGES.

3236 Wilson Drive NW, Walker, MI 49534
800-253-3893 | www.oliverquality.com

WARRANTY PROCEDURE

1. If a problem should occur, either the dealer or the end user must contact the Parts and Service Department and explain the problem.

2. The Parts and Service Manager will determine if the warranty will apply to this particular problem.

3. If the Parts and Service Manager approves, a Work Authorization Number will be generated, and the appropriate service agency will perform the service.

4. The service dealer will then complete an invoice and send it to the Parts and Service Department at Oliver Packaging & Equipment Company.

5. The Parts and Service Manager of Oliver Packaging and Equipment Company will review the invoice and returned parts, if applicable, and approve for payment.

3236 Wilson Drive NW, Walker, MI 49534
800-253-3893 | www.oliverquality.com

RETURNED PARTS POLICY

This policy applies to all parts returned to the factory whether for warranted credit, replacement, repair or re-stocking.

Oliver Packaging and Equipment Company requires that the customer obtain a Return Material Authorization (RMA) number before returning any part. This number should appear on the shipping label and inside the shipping carton as well. All parts are to be returned prepaid**.** Following this procedure will insure prompt handling of all returned parts.

To obtain an RMA number contact the Repair Parts Deptartment toll free at (800) 253-3893.

Parts returned for re-stocking are subject to a **RE-STOCKING CHARGE**.

Thank you for your cooperation,

Repair Parts Manager
Oliver Packaging and Equipment Company